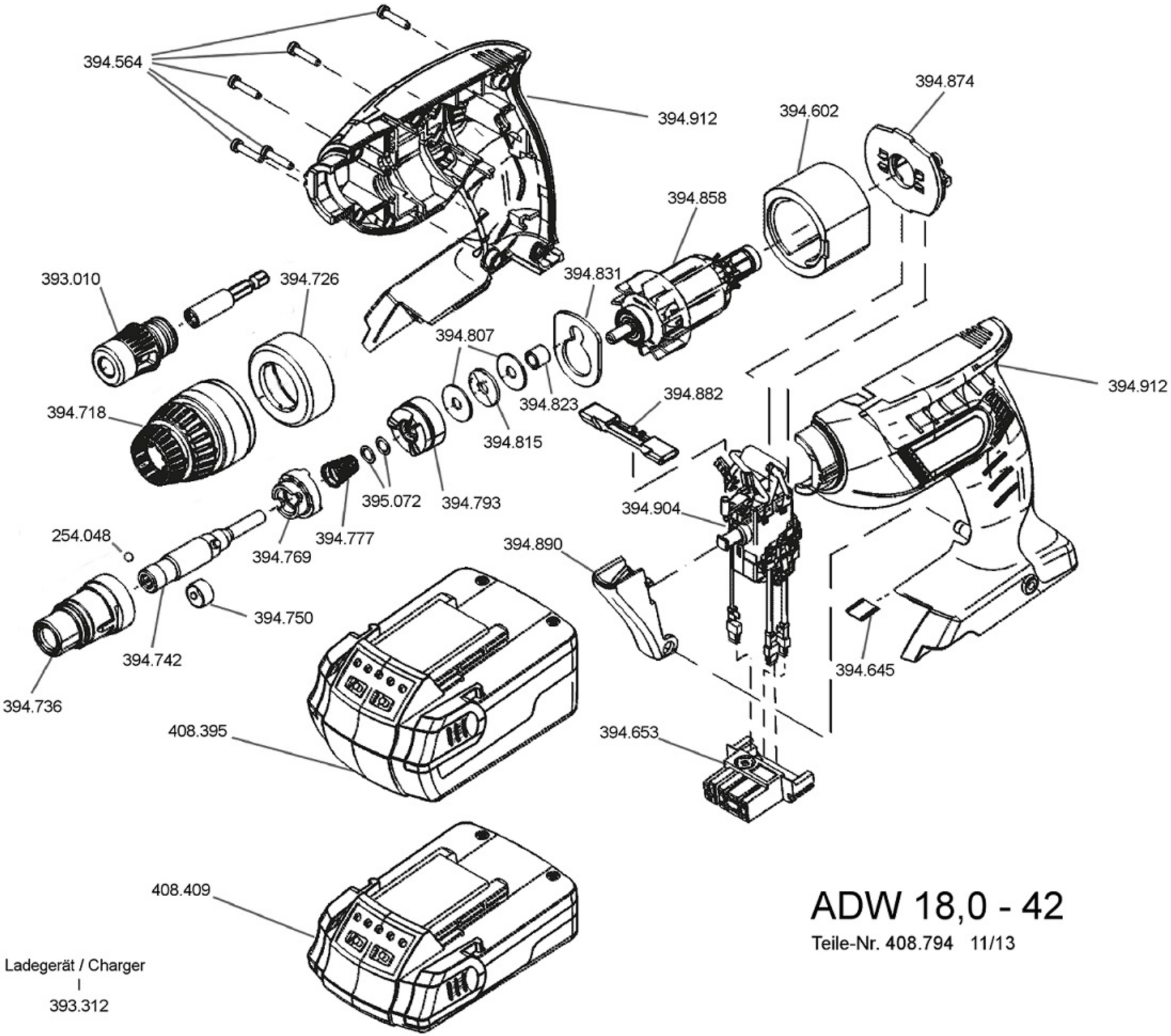


# ADW 18,0 - 42

Teile-Nr. 408.794 11/13